SPECIFICATION APPLIED

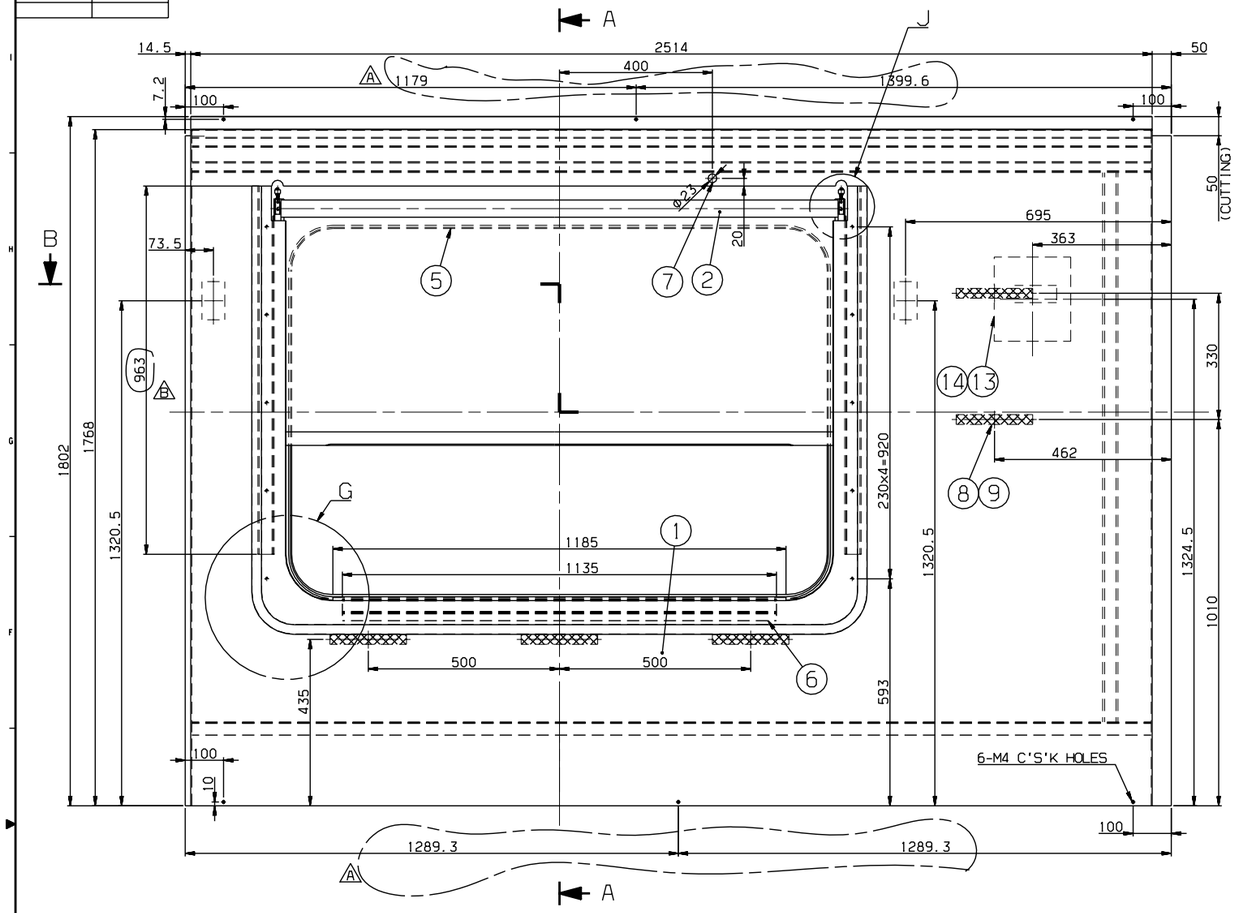

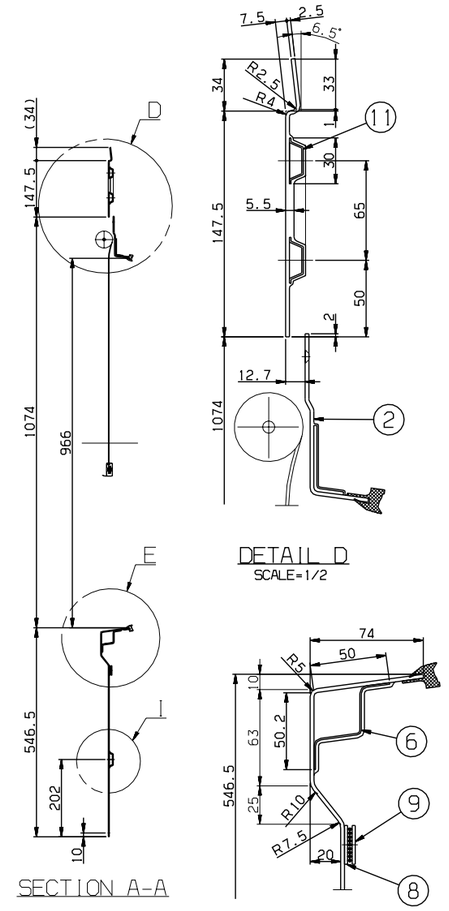

SECTION A-A

DETAIL D
SCALE=1/2

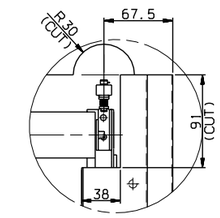

DETAIL J
SCALE=1/3

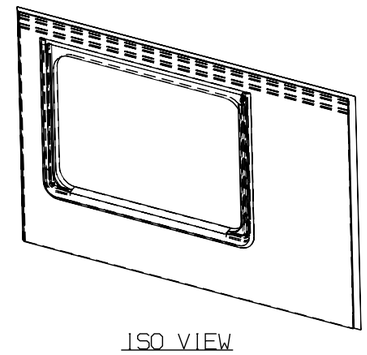

ISO VIEW

DETAIL E
SCALE=1/2

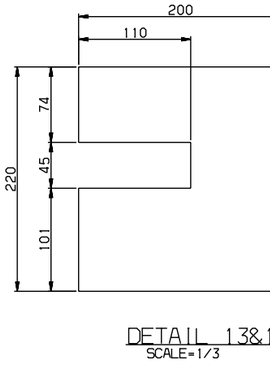

DETAIL 13&14
SCALE=1/3

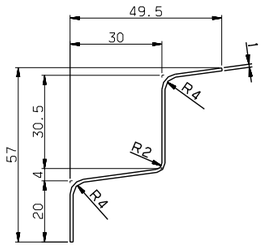

DETAIL #6
SCALE=1/1

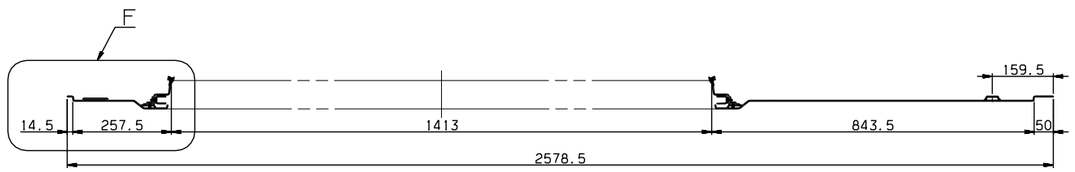

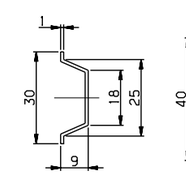

DETAIL #11
SCALE=1/1

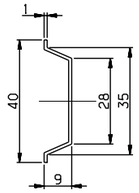

DETAIL #10
SCALE=1/1

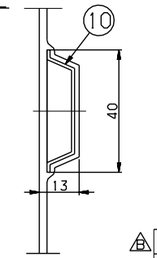

DETAIL I
SCALE=1/1

SECTION B-B

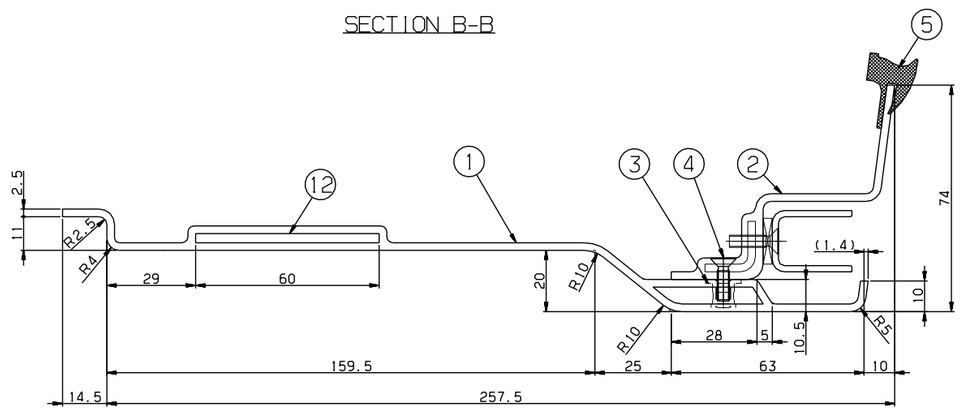

DETAIL F
SCALE=1/1

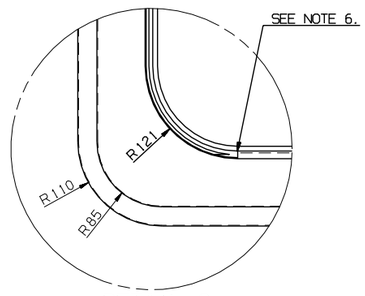

DETAIL G
SCALE=1/4

NOTE

1. AN INTERIOR PANEL'S COLOR(RAL 7047) AND SURFACE SHALL BE MANUFACTURED AFTER SAMPLE'S APPROVAL BY CUSTOMER
2. PART 5 SHALL BE CUT ADEQUATELY AND USED
3. PART 7 IS TO PROTECT.
4. PART 2 SHALL BE WELL OPERATED UNDER CONDITION OF ASSEMBLY
5. PART 8 SHALL BE FIXED ON THE PART 1, AND PART 9 SHALL BE DELIVERED SEPERATETLY
6. THE INTERFACE BETWEEN PART 1 AND PART 2 SHALL BE STRONGLY SEALED
7. (B) PART 4 SHOULD BE APPLIED WITH PART 15.

	NO.	PART NO.	DESCRIPTION	MATERIAL	Q'TY	V.T	REMARKS
(B)	15	CP910004-406	ADHESIVE	ASSY	1		LOCTITE 242
	14	RFP51193EJ0-014	PACKING	CR	1		PL.T2x220x200 MS39000-004(SC70-F2(CR))
	13	RFP51193EJ0-013	PACKING	CR	1		PL.T10x220x200 MS39000-004(SC70-F2(CR))
	12	RFP51193EJ0-012	SEAT.TAP	SUS304	2		PL.T3x100x60
	11	RFP51193EJ0-011	STIFFENER	A1050P	2		T1
	10	RFP51193EJ0-010	STIFFENER	A1050P	2		T1
	9	RFP51193EJ0-009	DUAL_LOCK,FASTENER	ASSY	5		3M,SJ-3550 L=200
	8	RFP51193EJ0-008	DUAL_LOCK,FASTENER	ASSY	5		3M,SJ-3551 L=200
	7	RFP90013AN0	RUBBER,BUSH	ASSY	1		G1.1623
	6	RFP51193EJ0-006	STIFFENER	SUS304	1		T1.L=1135
	5	RFP51193EJ0-005	RUBBER,SECTION	ASSY	1		RFP51011AN0,L=4600
	4	RS60607-098S	SCREW,F.H	SUS304	10		M4x14
	3	RFP51193EJ0-003	NUTSERT	SUS304	10		M4
	2	RFP51009AN0	PANEL,BLIND WINDOW	ASSY	1		
	1	RFP51193EJ0-001	PANEL	FRP	1		T2.5

승인 APP	JeongYul Lee 2014.10.24	재질 MAT'L	ASSY	명 칭 TITLE	WINDOW,MASK,TYPE II
검도 CHK	KeongBong Park 2014.10.24	표면처리	유광 G.W		
설계 DGN	HeonUk Lee 2014.10.24	일반공차	MC VD CT	도면 번호 DRG. NO	RFP51193EJ0 Ver. 00 Rev. -B
제도 DRG	HeeSook Jeong 2014.10.24		B B B	MS	RSD1402
		SCALE 1/8	SHEET 1 of 1		RFP-
		SIZE A1	최근승인 REF. NO.		본-PRJT

HYUNDAI Rotem 현대로템주식회사

심리번호

기 호 MARK	일 자 DATE	변 경 내 용 DETAIL OF REVISION(E.C ZONE)	설변번호 E.C NO.	설계 DGN	검도 CHK	승인 APP
Bx3	2014.12.18	ADDED PART NO.#15 & DIMENSION	RSD1402-U071	H.U.LEE	K.B.PARK	J.Y.LEE
Ax2	2014.11.30	ADDED DIM	RSD1402-U066	H.U.LEE	K.B.PARK	J.Y.LEE

기 호 MARK	일 자 DATE	변 경 내 용 DETAIL OF REVISION(E.C ZONE)	설변번호 E.C NO.	설계 DGN	검도 CHK	승인 APP

구분			
치수 허용차 DIMENSION	~ 40	2	4
	~ 30	2	3
	~ 10	1	1.5
	< 3	0.5	1
절단 CUTTING	~3150	-	7
	~1600	4	5
	~ 800	3	4
	~ 400	2	3
	~ 200	1.5	2
	~ 100	1	1.5

등급 GRADE	A	B
성형, 구조용 MOLDING (±)		
~20M	8	14
~15M	7	12
~12M	6	10
~8M	5	8
~4M	4	6
~2M	3	4
~1M	2	3
~315	1	2
~120	1	2
~30	1	1

등급 GRADE	A	B	C
용접 구조용 WELDING (±)			
~20M	-	6.0	8.0
~15M	-	5.0	7.0
~12M	-	4.0	6.0
~8M	-	3.0	5.0
~4M	0.8	2.0	4.0
~2M	0.5	1.2	3.0
~1M	0.3	0.8	2.0
~315	0.2	0.5	1.2
~120	0.15	0.3	0.8
~30	0.1	0.2	0.5

등급 GRADE	A	B	C
기계 가공용 MACHINING (±)			
3~6	0.05	0.1	0.2

일반공차 GENERAL TOLERANCE

본 도면은 당사 재산권에 속하므로 무단복사/배포 금지됨. PROPERTY OF ISSUING ENTITY, CANNOT BE DISTRIBUTED OR REPRODUCED WITHOUT AUTHORIZATION.

CATIA